THIS INFORMATION IS CONFIDENTIAL AND IS DISCLOSED TO YOU ON CONDITION THAT NO FURTHER DISCLOSURE IS MADE BY YOU TO OTHER THAN TOP-LINK PERSONNEL WITHOUT WRITTEN AUTHORIZATION FROM TOP-LINK LTD.

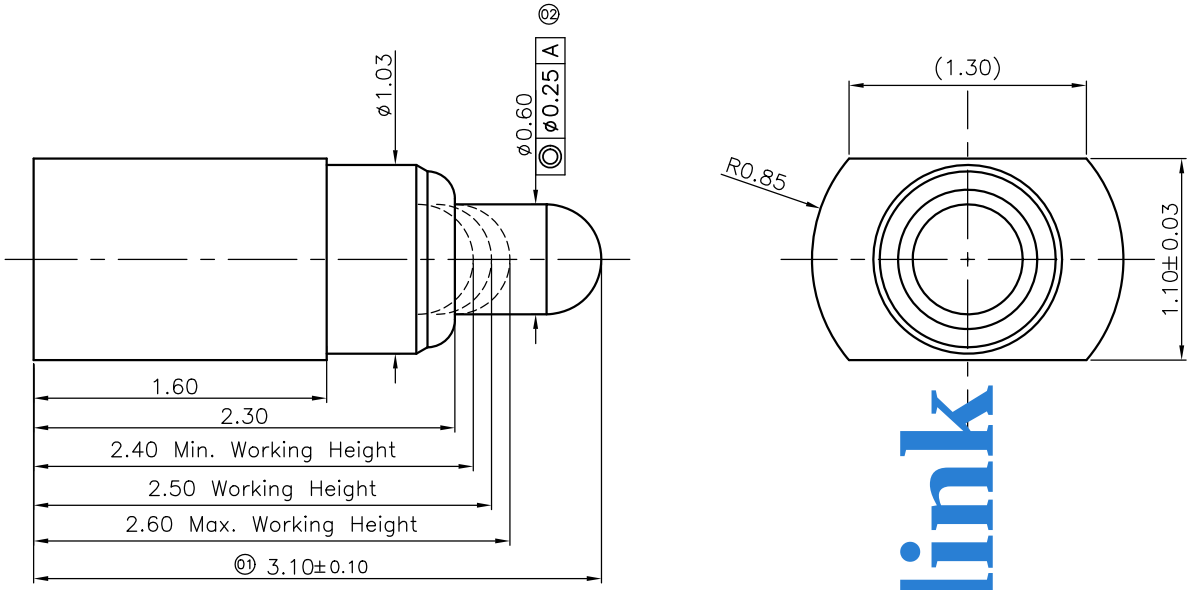

Notes:
1 Dimensions shall be interpreted per ASME Y14.5M
2 Mechanical performance(See the table 1)
<2.1>The force is the average of forces obtained when plunger goes downwards and upwards
<2.2>Warning:Working height are not permitted to be less than Min working height
3 Electrical performance
<3.1>Current rating: 2.0A
<3.2>Voltage rating: 36VAC/DC
<3.3>Dynamic Resistance:30mOhm Max (between max and min working height)
4 Environmental performance
<4.1> RoHS compliant
<4.2>Operating Temperature range:−40°C~+85°C
<4.3>Withstanding High Temperature:260°C/10Sec
5 Packaging:Carrier tape.

Table 1:Mechanical performance		
Working Height	2.5mm	70±20gf
Durability	10000 Cycles Min.	

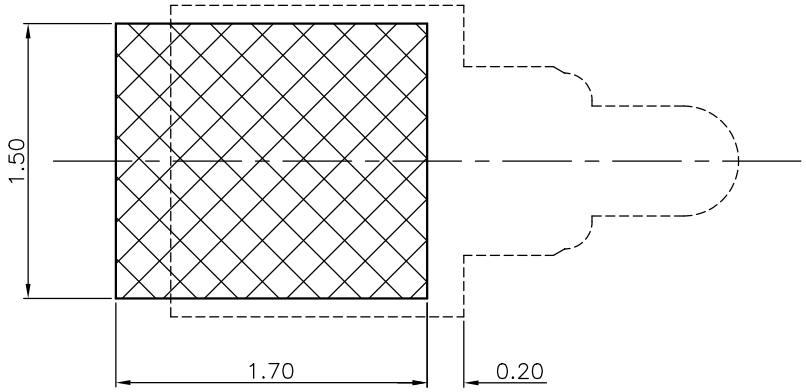

RECOMMEND PCB LAYOUT(TOP VIEW)
Layout Tolerance: ± 0.05mm

Top-link

Item	Part Name	Q'TY	Material	Finish
3	Body	1pcs	Leaded Brass	Au 0.1um min plated over 1.4um min Ni
2	Plunger	1pcs	Leaded Brass	Au 0.4um min plated over 1.4um min Ni
1	Spring	1pcs	Stainless steel wire	--------

Item	Revision record	Date
XA	New Release	2018.03.16

Top-Link Electronics Ltd.
TOLERANCES UNLESS OTHER SPECIFIED
0. = ± −
0.0 = ± 0.15
0.00 = ± 0.10
0.000= ± −
Angle: ±1°
SURF TEXTURE: REMOVE BURRS.
BREAK SHARP EDGES R0.05 MAX.DO NOT SCALE PRINT.

Type: Customer drawing		Unit: mm	top-link
DRW: Yang.cb	APRD:		
CHK:	REL:		
Name: Pogo Pin			
Scale: 1:1	Size: A4	Part NO.: 10101012318	Page: 1/1	Rev: XA