THIS INFORMATION IS CONFIDENTIAL AND IS DISCLOSED TO YOU ON CONDITION THAT NO FURTHER DISCLOSURE IS MADE BY YOU TO OTHER THAN TOP-LINK PERSONNEL WITHOUT WRITTEN AUTHORIZATION FROM TOP-LINK LTD.

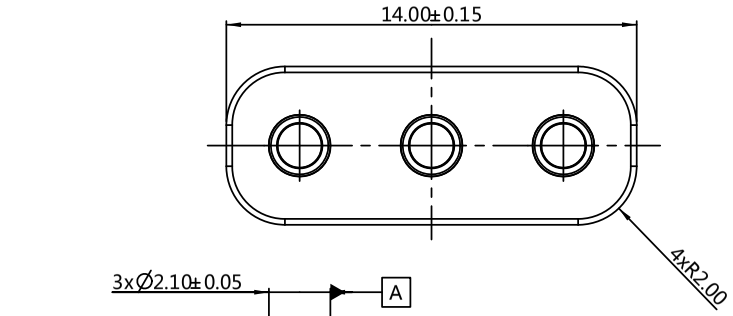

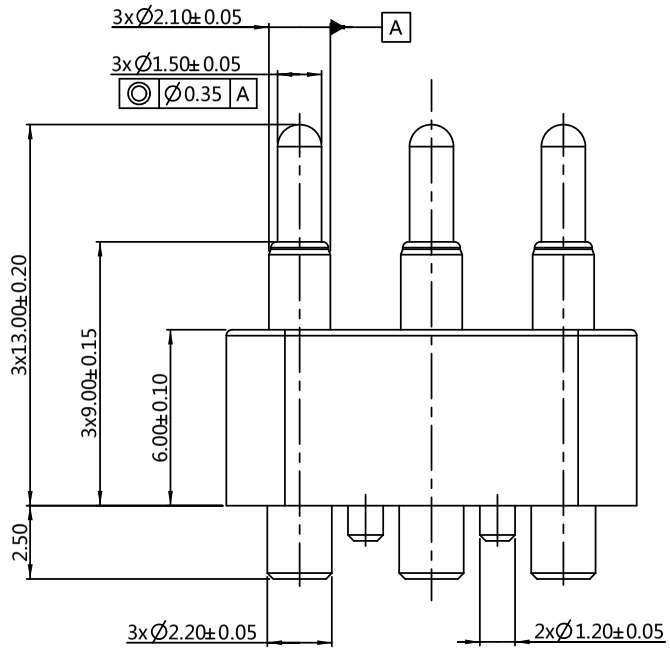

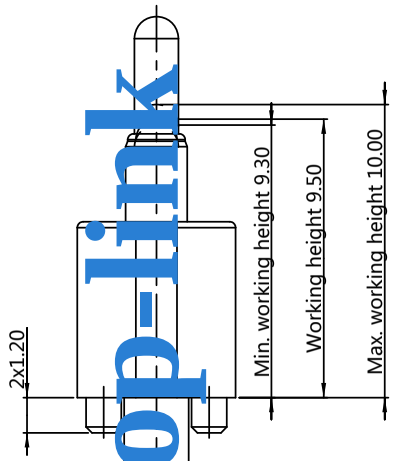

Top-link

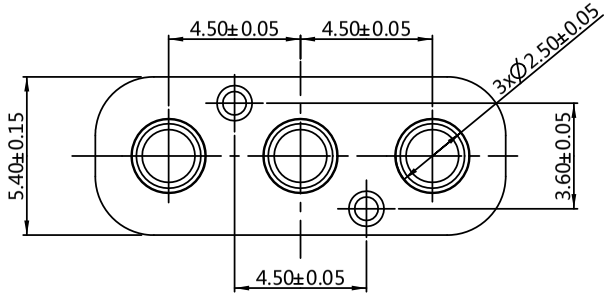

Notes:
1 Dimensions shall be interpreted per ASME Y14.5M
2 Mechanical performance(See the table 1)
<2.1>The force is the average of forces obtained when plunger goes downwards and upwards
<2.2>Warning:Working height are not permitted to be less than Min working height
3 Electrical performance
<3.1>Current rating: 2.0A
<3.2>Voltage rating: 12VAC/DC
<3.3>Static Resistance:50mOhm Max (at working height)
<3.4>Insulation Resistance:100MOhm minimum
4 Environmental performance
<4.1> RoHS compliant
<4.2>Operating Temperature range:-40°C~+85°C
<4.3>Withstanding High Temperature:260°C/10Sec
5 Packaging:Bag

Table 1:Mechanical performance		
Max. Working Height	9.50mm	100± 30gf
Durability	10000 Cycles Min.	

Item	Part Name	Q'TY	Material	Finish
4	Housing	1pcs	High temp.Plastic; UL94 V-0 Color Black	------
3	Spring	3pcs	Stainless steel wire	------
2	Barrel	3pcs	Leaded Brass	Au 0.025um min plated over 1.25um min Ni
1	Plunger	3pcs	Leaded Brass	Au 0.15um min plated over 1.25um min Ni

XA	New release	2020.07.06
Item	Revision record	Date

Top-Link Electronics LTD.

TOLERANCES UNLESS OTHER SPECIFIED
0. = ± 0.25
0.0 = ± 0.15
0.00 = ± 0.10
0.000 = ± 0.005
Angle:± 1°
SURF TEXTURE:Ra1.6
REMOVE BURRS.
BREAK SHARP EDGES R0.05 MAX.

Type: Customer Drawing		Unit mm	top-link
DRW: Minos	APRD:		
CHK:	REL:		
Name: Pogo pin			
Scale: 4:1	Size A4	Part NO. 10101033437	Page: 1/1 / Rev: XA

4 3 2 1

D C B A